Art. Nr. 60507

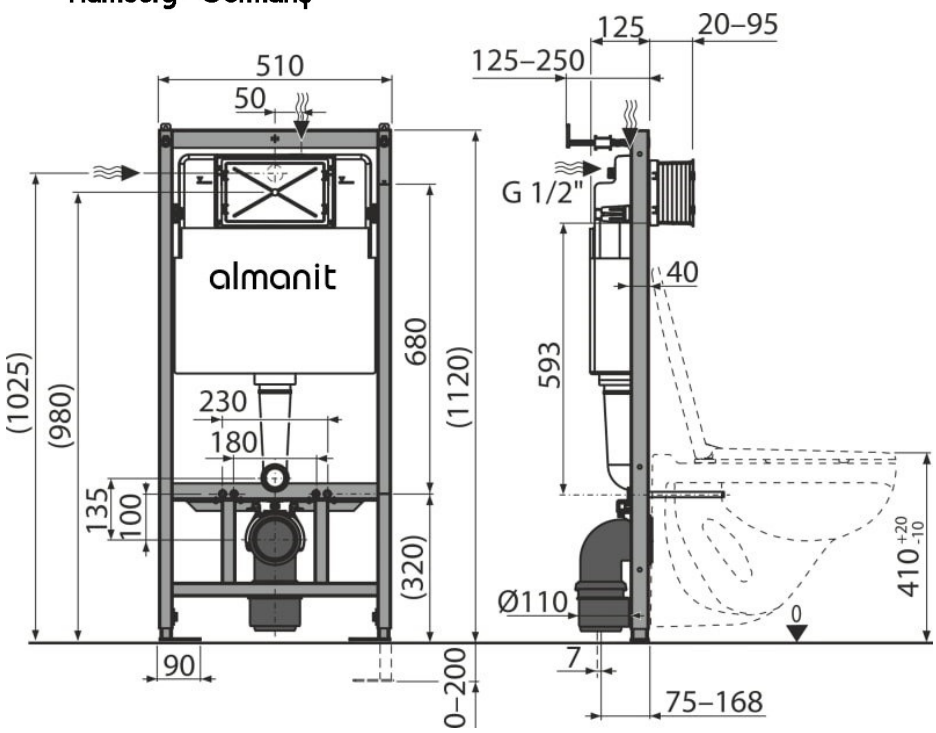

Wall Concealed WC Cistern - Dry Buld-up / Plasterboard

+ For wall-hung WC
+ For mounting in front of a support wall or in to a plasterboard construction
+ For floor thickness 0–200 mm
+ For installation of wall-hung WC pans with a connecting pitch of 180 mm or 230 mm
+ Adjustable anchor feet and a spring-lock system, with a range of 0–200 mm
+ Sliding rail holder for the waste connector can be set to eight positions between 0–93 mm
+ The frame allows the anchoring to a separate sufficiently strong plasterboard partition, in front of the bearing wall
+ Cistern hinges made of two-component material insulate the transmission of vibrations from buildings
+ Possibility of tilting the cistern for easy installation in wooden construction buildings or mobile cells
+ Compatible with all „almanit“ flush plates
+ Water supply from the rear/top
+ The cistern is made of one piece, thus ensuring 100% impermeability
+ The service opening cover simplifies assembly and prevents the penetration of moisture and impurities
+ Installation depth adjustable from 20–95 mm / Installation depth 125 mm
+ Frame material: powder-coated metal

Water connection from the back or top via mounting holes	G1/2 "
Functional range of water pressure	0,05 – 1,6 MPa
Recommended range of water pressure	0,3 – 0,5 MPa
Big flush	6 – 9 l
Small flush	2,5 – 3,5 l
The default setting of large flush	6 l
The default setting of small flush	3 l
Hygienic reserve	3 l
Water volume in the cistern	9 l
Load test	400 kg

almanit sanitary gmbh
Papenstrasse 23 22089 Hamburg Germany Tel.:+49 40 2513347 Email: info@almanit.de